NEW RENAULT KIGER

rethink performance

With its muscular silhouette, the New Renault Kiger reveals a dynamic modernity, boasting a turbo charged engine and 3 unique drive modes for an enhanced driving experience. Enjoy unparalleled everyday functionality with practical and intuitive features.

Ready for urban life and the freedom to escape, with a design crafted for performance.

- 3 multi-sense driving modes
- multi-view camera
- wireless smartphone replication
- tri-octa LED head lamps
- ventilated leatherette seats
- 6 airbags as standard

interactive menu

01. driving experience

02. design

03. advanced technologies

04. roominess – driving comfort

05. safety features

06. customization

enhanced driving experience

Powerful sensations and driving pleasure meet exceptional performance. With an optimized vehicle weight and the flat torque curve of the turbo charged engines paired with infinite gear ratio X-Tronic CVT transmission, accelerate from 0 to 100 km/h in 11 seconds.

Easy-to-view driving information on a sleek, contemporary 7-inch TFT cluster paired with multi-sense drive modes that alter steering, pedal and gear ratios (CVT), Renault Kiger adapts all to suit your driving needs.

menu ↑

athletic SUV

The new generation Renault Kiger takes a leap forward with its robust design shaped by dynamic athletic lines. Iconic SUV features are enhanced with imposing front and rear bumpers extending to the wheel arches, a ground clearance of 205 mm and functional roof bars. A modern SUV that is even more exclusive, featuring two new two-tone body colours with black roof.

The grille features the sharp design of Renault's new identity, enhanced by the distinctive and high-performance tri-octa LED head lamps. The sculpted tail lights and 16-inch alloy wheels amplify its bold, sporty character.

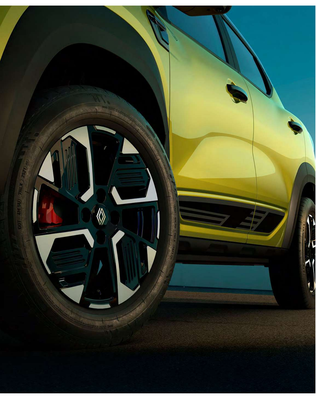

menu ↑

tech on board

Technology designed for you, featuring a 8-inch central touchscreen with wireless smartphone replication to access your favorite apps. Enjoy compatibility with Apple CarPlay® and Android Auto™. Feel the beat with Arkamys® tuned signature sound . Daily life simplified: the doors unlock automatically as you approach with the hands-free card.

Essential driving information always at your fingertips with the 7-inch Thin Film Transistor (TFT) cluster featuring widgets attuned to each driving mode.

Start with the touch of a button, and stay connected at all times through wireless smartphone replication. Get fast cable-free charging by placing your smartphone on the wireless charging dock.

Android Auto™ is a trademark of Google Inc. Apple CarPlay® is a trademark of Apple Inc.

comfortable and convenient

Functionality and comfort are reimagined with new ventilated leatherette front seats and a refined two-tone interior aesthetic. The carefully designed cabin space offers class-leading roominess, along with one of the best rear knee room measurements, providing up to 222 mm of comfort.

The spacious 405 L trunk provides a solution for all your trips, enhanced by an additional loading capacity of up to 50 kg on the sturdy roof rails.

The cabin offers up to 29L of practical, well designed interior storage space throughout.

upper glovebox

high centre console with storage

menu ↑

human first program
safety by Renault

15+ standard safety features

6 airbags
Six airbags offer increased protection.

tyre pressure monitoring system
Displays the tire pressure status in real-time.

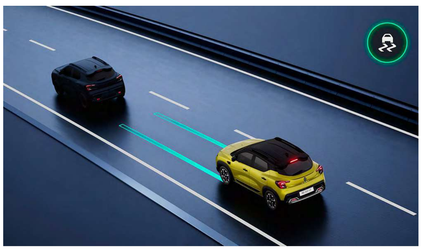

anti-lock braking system (ABS) and EBD with brake assist
Optimizes braking force distribution to each wheel, enhancing vehicle stability and control during braking.

driving assistance

- anti-lock braking system (ABS)
- EBD with brake assist
- electronic stability program
- pedestrian protection
- speed sensing door lock

parking assistance

- reverse parking sensors

security assistance

- curtain airbags
- follow me home head lamps[1]
- front airbag
- front seat belt reminder - driver + passenger
- front seat belts with load limiter
- Isofix
- impact sensing door unlock
- 3-point seat belt – all seats
- rear door child lock
- rear seat belt reminder
- seat belt with pretensioner (driver only)
- side airbags driver & passenger
- take-a-break reminder[1]
- tyre pressure monitoring system

(1) in iconic version.

menu ↑

colours

autumn yellow

grey

blue

white

silver

dual-tone colours

autumn yellow with black roof

grey with black roof

white with black roof

red with black roof

	evolution	techno		iconic	
colour variants	single tone	single tone	dual tone	single tone	dual tone
autumn yellow	-	▪	▪	▪	▪
grey	▪	▪	▪	▪	▪
blue	-	▪	-	▪	-
white	▪	▪	▪	▪	▪
silver	▪	▪	-	▪	-
red	-	-	▪	-	▪

▪ available. - not available.
photos not contractually binding

menu ↑

evolution

- 8-inch display link floating touchscreen
- rear view camera
- rear air conditioning vents
- Android Auto™ and Apple CarPlay®

black fabric upholstery

16-inch steel wheels with “voyage” wheels covers

Android Auto™ is a trademark of Google Inc. Apple CarPlay® is a trademark of Apple Inc.

techno

- tri-octa LED pure vision headlamps
- manual AC
- Android Auto™ and Apple CarPlay®
- smart access card

light embossed fabric upholstery

16-inch "discover" flex wheels

Android Auto™ is a trademark of Google Inc. Apple CarPlay® is a trademark of Apple Inc.

iconic

- ventilated leatherette seats
- auto headlamps and rain sensing wipers
- multi-view camera
- 16-inch evasion diamond cut alloys wheels
- drive modes

light leatherette upholstery

16-inch evasion diamond cut alloy wheels

menu ↑

accessories

rear trunk cladding
Protect the rear from scratches, scuffs, and everyday wear.

moulded mats
Easy-to-clean, durable and snug fit mats that keep your cabin spotless while maintaining a refined look.

airbag-compatible seat covers
A perfect balance of aesthetics and comfort while allowing unhindered airbag deployment.

armrest console organiser
Neatly store travel essentials for an organised journey.

engines

1.0L energy: MT	1.0L energy: AMT	1.0L turbo	1.0L turbo CVT
fuel			
petrol			
fuel tank capacity (litres)			
40			
max power output (kW @ rpm)			
52 @ 6,250	52 @ 6,250	74 @ 5,000	74 @ 5,000
max torque (Nm @ rpm)			
96 @ 3,400-3,600	96 @ 3,400-3,600	160 @ 2,800-3,600	160 @ 2,000-5,000
transmission type			
5-speed MT	easy-R AMT	5-speed MT	x-tronic CVT
ground clearance (mm)			
205			

dimensions

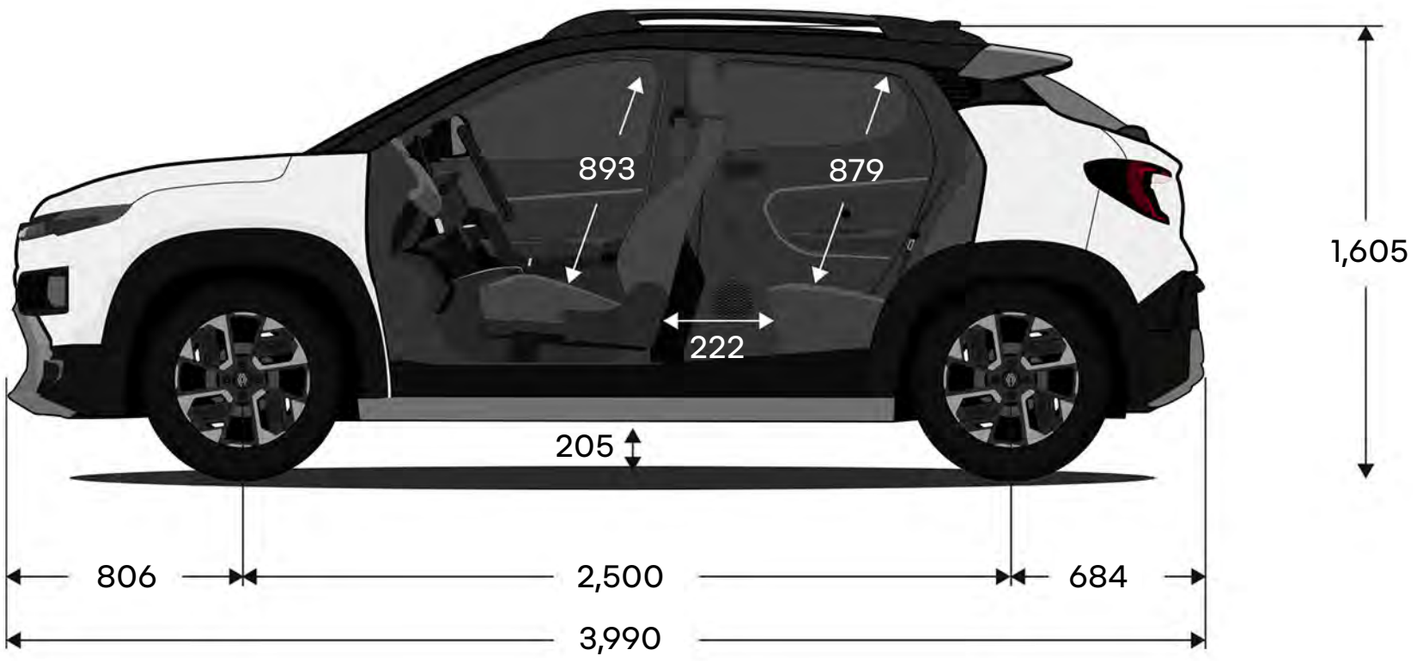

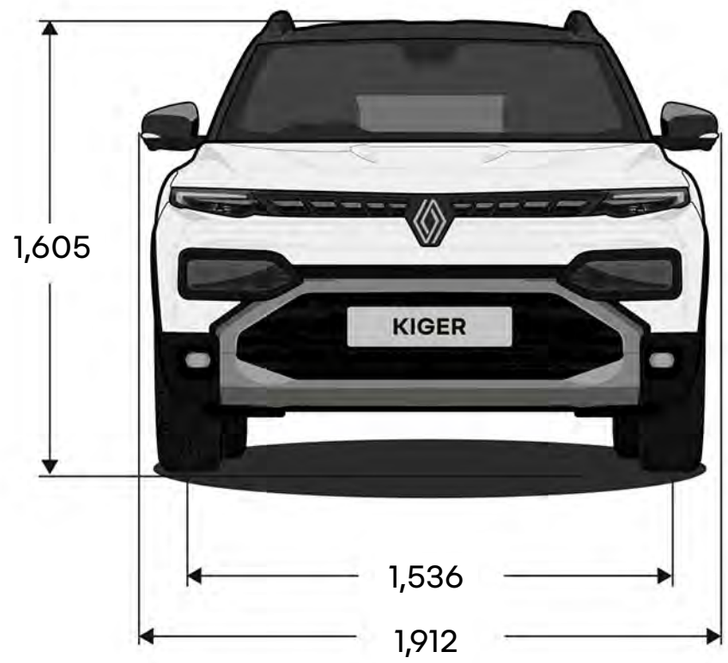

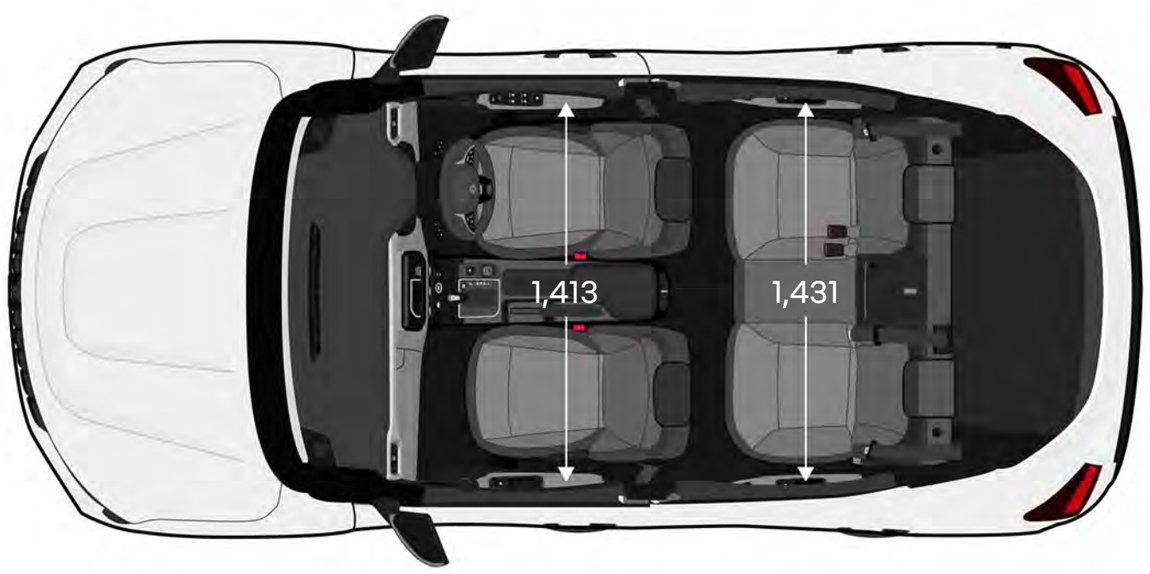

dimensions in mm

menu ↑

human first program
safety by Renault

the human first program is a comprehensive safety program developed by Renault in collaboration with researchers, experts and fire-fighters.

because road safety is the business of all road users – be they pedestrians, cyclists or motorists – the human first program by Renault undertakes to:

1. **prevent accidents by developing safety equipment and advanced driving and safety assistance systems**

up to 32 advanced driving assistance systems / more than 60 safety systems, up to 7 airbags, child seats (Isofix), Renault's Fixe4sure solution / more than 2,000 safety-related patents filed since 1970

2. **manage accidents once they have happened by drawing on innovations developed in collaboration with fire-fighters**

QRescue / Fireman Access / more than 5,000 fire-fighters trained over the past 10 years in 20 countries throughout the world / around 400 cars given per year for their training

3. **reduce the number of accidents and their severity by investing massively in R&D**

safety score / safety coach / connected services / big data / artificial intelligence and cybersecurity systems

find out more about the human first program

Renault warranty

Enjoy complete peace of mind with a standard 5 year/150 000 km mechanical warranty and 2 year/ 30 000 km service plan. Unlock significant fuel savings while embarking on new adventures.

Renault care service

We are always by your side to make your driving experience easier and save you time maintaining your Renault. We'll give you online estimates and appointments, service packages, maintenance contracts, insurance and assistance, and more simple, easy solutions perfectly tailored to your needs.

find out more about Renault care service

every precaution was taken to ensure that this brochure was accurate and up-to-date when published. this document has been created using pre-production and prototype models. in line with its policy of continuous product improvement, renault reserves the right to modify the specifications, vehicles and accessories described and featured at any time. any such modifications are communicated to renault dealers as quickly as possible. depending on the country of sale, versions may differ and some equipment may be unavailable (standard, optional or accessory). please contact your local dealer for the latest information. for reasons to do with the medium, the colours featured in this document may differ slightly from those of the actual paintwork or interior trim. all rights reserved. reproduction in any format and by any means of all or part of this brochure is prohibited without prior written authorisation from renault.

publicis – photo credits: renault group - direction design – august 2025.
renault s.a.s, a french simplified joint stock company with a share capital of €533,941,113.00 / 122-122 bis avenue du général leclerc – 92100 boulogne-billancourt cedex, france – registered on the trade and companies registry (r.c.s.) of nanterre under number b 780 129 987 / tel.: 0806 00 20 20.

Renault recommends Castrol

www.renault.co.za

menu ↑