NEW RENAULT TRIBER

rethink space

Stylish allure highlighted by the new Renault identity and best-in-class versatility, next generation Renault Triber redefines the standards of the family vehicle. With an innovative fusion of assertive design, spacious and ultra-modular interior, it accommodates up to 7 seats. Equipped with over 15 standard safety features, travel with peace of mind, knowing excellence ensures your serenity.

Whether city or countryside, its robust style is your reliable companion. Experience a distinctive everyday life.

5 to 7 seats	removable 3rd row easy fix seats	ultra-modular with multiple seating combinations
625 L boot space(1)	8 inch display link touchscreen with wireless smartphone replication(2)	15+ standard safety features

(1) in 5-seater configuration, 3rd row removed. (2) in Iconic version.

menu ↑

interactive menu 👆

01. design

02. roominess

03. technology

04. safety features

05. customization

style reimagined

A new generation with a compact and robust design, featuring more pronounced SUV styling than ever with its strong front face and silver finish skid plates[1]. Drive in comfort with its elevated ground clearance of 182 mm and roof rails with load carrying capacity up to 50 kg. Add a touch of exclusivity with our new range of colours, including terracotta brown.

Renault Triber features the new emblem, a symbol of the brand's innovative spirit. Its expressive grille is wider and sculpted. A dynamic front bumper design enhances the car's presence with sharp lines and integrated air intakes.

Benefit from the sporty character provided by its 15 inch "landscape" dual tone styled flex wheels[2] that emphasize its aerodynamic design.

It stands out with its meticulously crafted details that make all the difference. Head lamps, tail lamps and fog lights are equipped with LED technology for optimal brightness and a redesigned bumper for a striking appearance.

(1) from techno version. (2) in Iconic version.

menu ↑

new generation interior

Experience a sense of clarity, space, and quietness within the cabin. An ergonomic and sleek dashboard, an 8-inch display link floating touchscreen(1) located within the driver's line of sight and steering wheel with all key controls at hand offer an enhanced driving experience.

Enjoy new harmonious light tones and expanded comfort with a thermally regulated atmosphere, thanks to the independent rear air-conditioning with 2nd and 3rd row vents(1).

(1) from Evolution version.

menu ↑

5 to 7 seats

An unparalleled interior volume designed to be spacious. Each of the 7 seats offer maximum comfort with easy access to all rows and 200 mm of knee room in the second row, the best in its category.
The generous 625 L boot(1) is easy to load, making life on board even more practical.

The art of clever storage: 23 L of convenient compartments
Enjoy refrigerated centre storage(2) and lower glove box(3) for journeys where nothing is left behind.

upper glove box & cooled lower glove box

center console cooled storage

(1) in 5-seater configuration, 3rd row removed. (2) from Techno version. (3) in Iconic version.

intelligent space

Experience record-breaking modularity that simplifies every moment of your everyday life: interior optimized to the centimetre for comfortable 7-person travel, with removable seats in the third row, 2nd row seats with slide/recline/fold and tumble function, and much more to offer with its highly versatile interior.

Enjoy unparallaled flexibility with multiple seating configurations.

intuitive and efficient technology

The 8-inch display link floating touchscreen[1] is your essential travel companion, keeping you connected wherever you go. Enjoy your favorite apps like Google maps and more, with wireless smartphone replication[2] on the central screen, thanks to Apple CarPlay® and Android Auto™.

The new 7-inch TFT (Thin-Film Transistor) instrument cluster[2] behind the steering wheel allows you to view essential driving information.

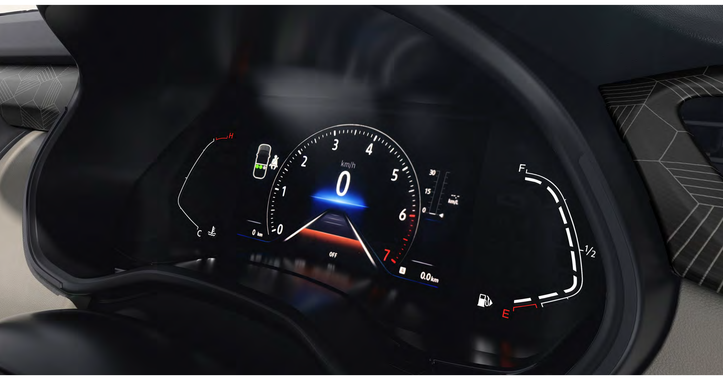

Plug in and charge your devices, smartphone, music player, or laptop via the USB port on the console. While driving, securely place your smartphone on the wireless charging pad[2] for quick and cable-free charging.

Android Auto™ is a trademark of Google Inc. Apple CarPlay® is a trademark of Apple Inc. (1) from Evolution version. (2) in Iconic version.

human first program
safety by Renault

15+ standard safety features

front parking sensors
Ultrasonic sensors in the front bumper measure the distance between the vehicle and an obstacle.

6 airbags
Six airbags offer increased protection.

tyre pressure monitoring system
Displays the tyre pressure status in real-time.

driving assistance

- anti-lock braking system
- EBD with brake assist
- follow me home head lamps[1]

parking assistance

- front parking sensors[1]
- rear parking sensors

security assistance

- curtain airbags
- front airbags - driver and passenger
- front seat belt with load limiter
- impact sensing lock-unlock
- Isofix with child seat anchorages
- seat belt reminder - driver + passenger
- seat belt with pretensioner (driver only)
- 2 side airbags (front seats)
- speed sensing door lock
- rear door child lock
- rear seat belt reminder
- pedestrian protection
- 3-point seat belt - all seats
- take-a-break reminder[1]
- tyre pressure monitoring system
- take belongings reminder

(1) in Iconic version.

colours

terracotta brown

grey

zanskar blue

white

silver

dual-tone colours

amber terracotta - black roof

silver - black roof

white - black roof

zanskar blue - black roof

grey - black roof

	Evolution	Techno	Iconic	
colour variants	single tone	single tone	single tone	dual tone (black roof)
terracotta brown	-	▪	▪	▪
grey	▪	▪	▪	▪
zanskar blue	▪	▪	▪	▪
white	▪	▪	▪	▪
silver	▪	▪	▪	▪

*Note: Printing limitations do not permit subtle paint shades to be shown with complete accuracy.

menu ↑

Evolution

- 8-inch display link floating touchscreen
- rear-view camera
- 2 front & 2 rear speakers
- independent rear A/C with 2nd and 3rd row vents

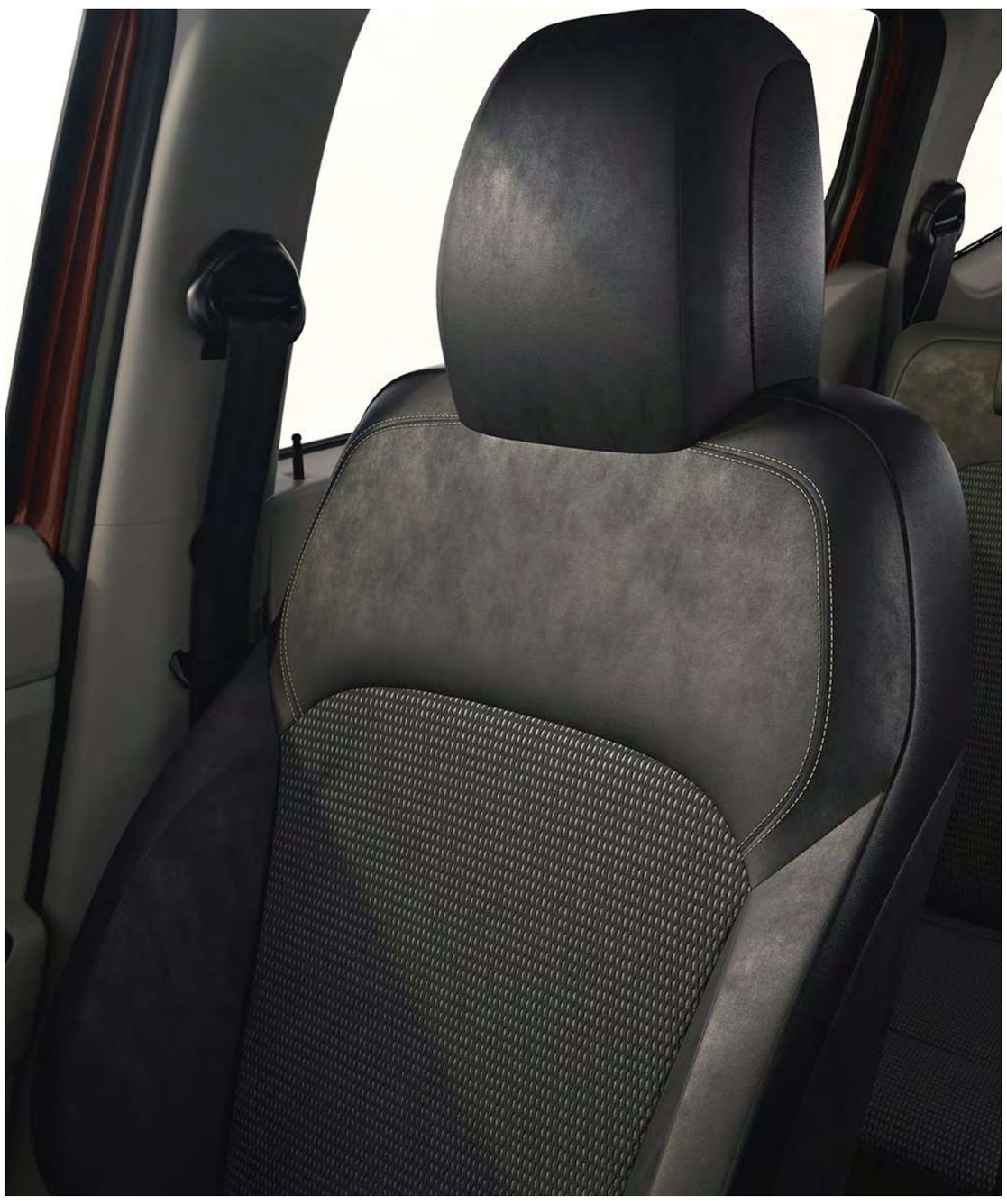

sporty all black woven upholstery

15-inch steel wheels with "downtown" covers

menu ↑

Techno

- LED signature tail lamps
- roof rails with load carrying capacity (50 kg)
- electrically adjustable ORVMS (Outer Rear View Mirrors) with LED turn indicators
- cooled centre console

suave black & greige woven upholstery

15-inch "landscape" black styled flex wheels

menu ↑

Iconic

- LED head lamps, DRLs (Daytime Running Lights), fog lamps & tail lamps
- auto headlamps and rain sensing wipers
- front parking sensors

suave black & greige woven upholstery

15-inch "landscape" dual-tone styled flex wheel covers

(1) in manual transmission only.

menu ↑

accessories

front grille insert
Add a bold touch to your vehicle's face with chrome front grille inserts. Designed to enhance the stance, this accessory adds a premium finish that's both elegant and assertive.

tail lamp surround
Elevate the rear look of your vehicle with chrome surrounds that frame the tail lamps with subtle contrast. A simple detail that adds definition and enhances the premium feel.

tailgate garnish
Complete the rear look with a chrome tailgate garnish[1] that lends a refined yet robust character. It integrates seamlessly with the design language of your vehicle while providing a stylish accent to the tailgate.

moulded mats
Keep your vehicle's floor looking clean and well-kept with mats that are shaped to match the cabin layout. Built for durability, they protect against everyday dust, spills and wear while offering easy maintenance.

seat storage bag
Designed to complement the modularity that Triber offers, the seat storage bag is a thoughtful add-on for everyday use. Designed to store the easy fix seats when removed.

[1]Available in Satin Chrome and Dark Chrome finishes.

menu ↑

engines

Evolution	Techno	Iconic
	fuel	
	multi point fuel injection	
	fuel tank capacity (litres)	
	40	
	max power output (kW @ rpm)	
	53 @ 6,250	
	max torque (Nm @ rpm)	
	96 @ 3,500	
	gearbox	
5-speed MT	5-speed MT	5-speed MT & Easy-R AMT

dimensions

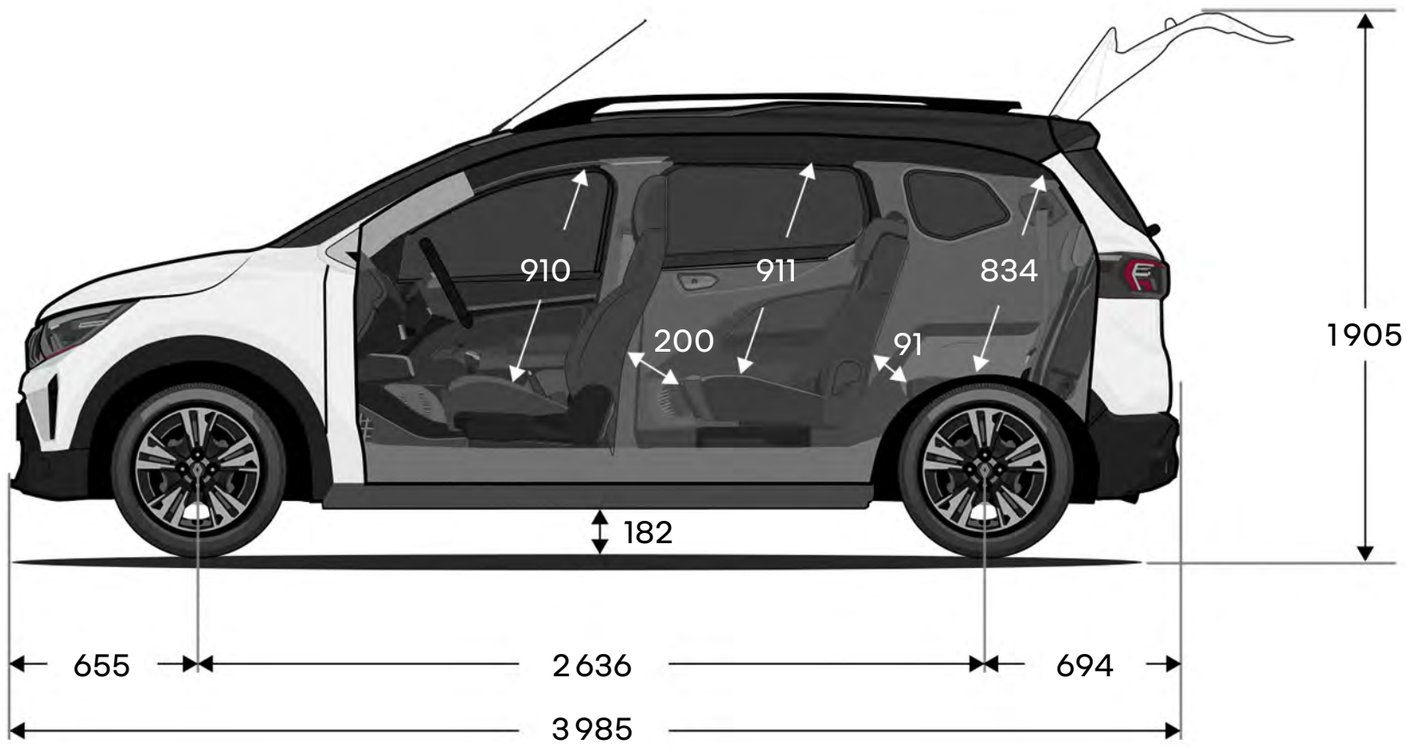

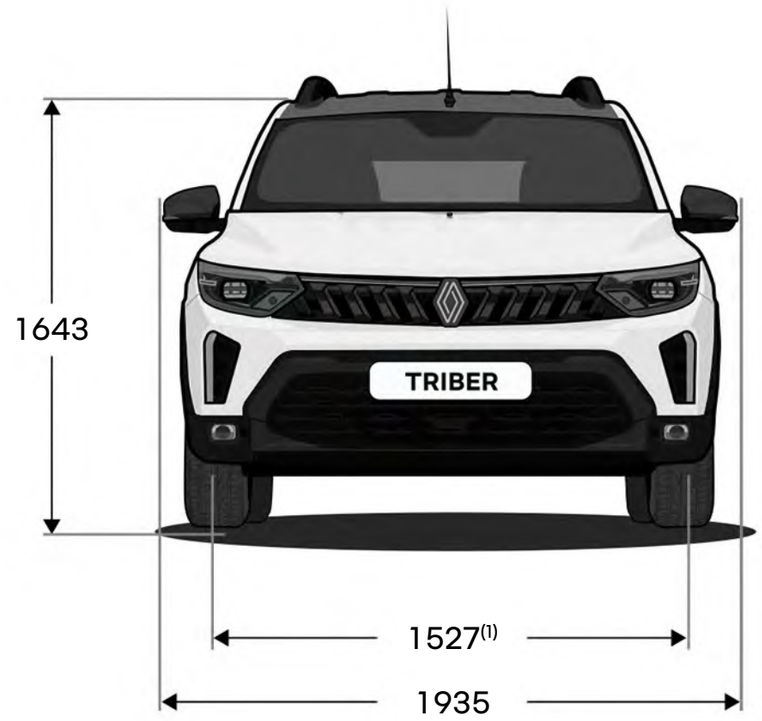

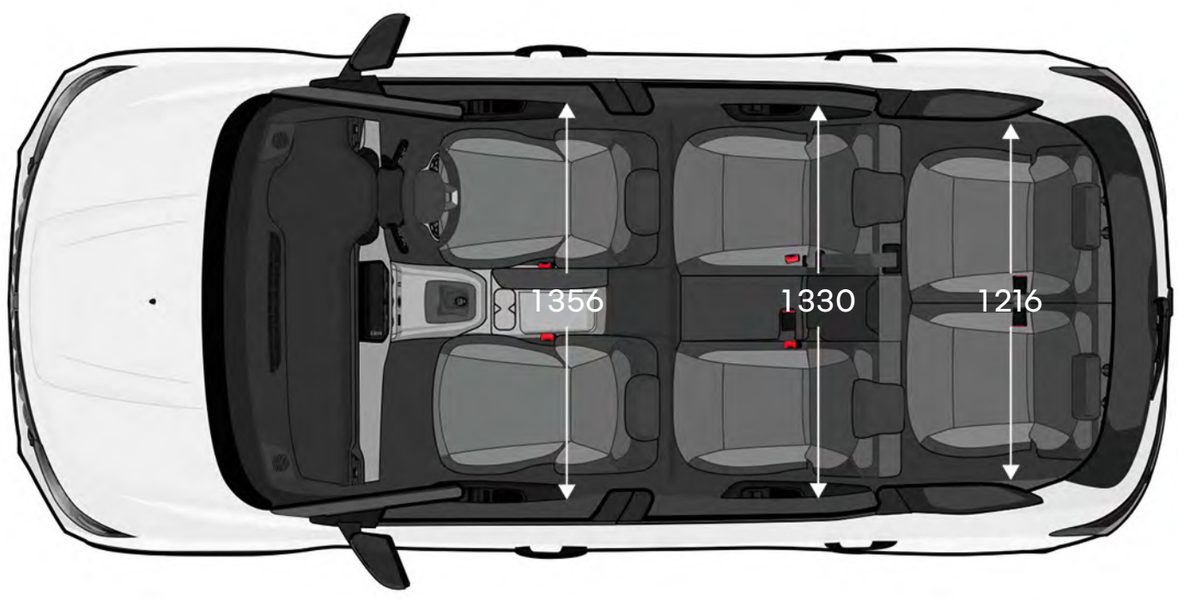

dimensions in mm

(1) Techno and Iconic variant

menu ↑

human first program
safety by Renault

the human first program is a comprehensive safety program developed by Renault in collaboration with researchers, experts and fire-fighters.

because road safety is the business of all road users – be they pedestrians, cyclists or motorists – the human first program by Renault undertakes to:

1. **prevent accidents by developing safety equipment and advanced driving and safety assistance systems**

up to 32 advanced driving assistance systems / more than 60 safety systems, up to 7 airbags, child seats (Isofix), Renault's Fixe4sure solution / more than 2,000 safety-related patents filed since 1970

2. **manage accidents once they have happened by drawing on innovations developed in collaboration with fire-fighters**

QRescue / Fireman Access / more than 5,000 fire-fighters trained over the past 10 years in 20 countries throughout the world / around 400 cars given per year for their training

3. **reduce the number of accidents and their severity by investing massively in R&D**

safety score / safety coach / connected services / big data / artificial intelligence and cybersecurity systems

find out more about the human first program

Renault warranty

Enjoy complete peace of mind with a standard warranty of 5 years / 150 000 km and 2 years / 30 000 km service plan. Unlock significant fuel savings along with the benefit of 7 seats.

2-year/30 000 km service plan and 5-year/150 000 km standard warranty (whichever occurs earlier).

Renault care service

We are always by your side to make your driving experience easier and save you time maintaining your Renault. We'll give you online estimates and appointments, service packages, maintenance contracts, insurance and assistance, and more simple, easy solutions perfectly tailored to your needs.

find out more about Renault care service

every precaution was taken to ensure that this brochure was accurate and up-to-date when published. this document has been created using pre-production and prototype models. in line with its policy of continuous product improvement, Renault reserves the right to modify the specifications, vehicles and accessories described and featured at any time. any such modifications are communicated to Renault dealers as quickly as possible. depending on the country of sale, versions may differ and some equipment may be unavailable (standard, optional or accessory). please contact your local dealer for the latest information. for reasons to do with the medium, the colours featured in this document may differ slightly from those of the actual paintwork or interior trim. all rights reserved. reproduction in any format and by any means of all or part of this brochure is prohibited without prior written authorisation from Renault. Renault vehicles come with a standard warranty of 5 year or 150 000 kms and a 2 year or 30 000km Service Plan, whichever is earlier. our customer care team is available on our toll-free number from monday to sunday 0800 601 189 , Roadside assistance 0800 601 189 , Accidents & towing service 0861 746 263 and Value added products (VAPS) 0861 337 278

publicis – photo credits: renault group - direction design– july 2025.
renault s.a.s, a french simplified joint stock company with a share capital of € 533,941,113.00 / 122-122 bis avenue du général leclerc – 92100 boulogne-billancourt cedex, france – registered on the trade and companies registry (r.c.s.) of nanterre under number b 780 129 987 / tel.: 0806 00 20 20.

Renault recommends Castrol

www.renault.co.za

menu ↑