GRAND VITARA

SUZUKI

DRIVE THE LEGACY

Push start and experience what it feels like to be part of an ever-lasting legacy. The Grand Vitara is back, designed for those who are bold enough to write their names in history.

BOOK
A TEST DRIVE

ETCHED IN HISTORY

It all started in 1988, when the first-generation Suzuki Vitara graced the world's stage, leaving an indelible mark with its boundless capabilities.

Three decades later, the legacy of this legendary SUV continues to captivate our hearts and minds. Today, with the arrival of the new Grand Vitara, we acknowledge the embodiment of sheer automotive excellence which withstands the test of time.

WHERE LIFESTYLE MEETS LEGACY

The Grand Vitara effortlessly accommodates everything and everyone, making even the busiest of lives simpler. From road trips to sporting events, canoeing, camping, and family gatherings, the Grand Vitara is the perfect car for all your adventures.

BOLD LEGACY DESIGN

The new Grand Vitara pays homage to its revered predecessor while embracing the cutting edge of modernity. Its timeless design boasts innovative features that offer a luxurious driving experience. With expressive design options and models to choose from, you can drive your own legacy in style.

From its dual-sliding panoramic glass sunroof* to its stylish leather interior* and its convenient keyless entry – the Grand Vitara allows you to leave a lasting impression every time you get on the road.

*GLX Model

PREMIUM FEATURES FOR A PREMIUM LEGACY

Robust and sophisticated, the Grand Vitara's core features let you enjoy every drive in grand style.

PRISTINE SEATING

GRAND VITARA GL

The black diamond patterned fabric with black stitching adds a refined and sophisticated look to the interior space, ensuring a comfortable driving experience.

GRAND VITARA GLX

You can take a seat on the stylish and elegant, black synthetic leather seats that make for a premium interior look.

BRIGHTEN UP YOUR LEGACY

Light up every trail with the LED projector headlights with LED daytime running lights across the range. The 9” touchscreen infotainment system* allows you to adjust the ambient lights* in the cabin using seven different brightness levels. The footwell lights* in the front seats add visibility for access to what you may need, while the glove box light* helps in storing your items.

*GLX Model

FIND
A DEALER NEAR YOU

ADMIRE YOUR JOURNEY

The dual-sliding panoramic glass sunroof* lets you experience refreshing open-air drives. Its double sliding glass panels create one of the biggest openings in its class and can be enjoyed from any seat in the car. It's the perfect view as you watch your legacy unfold.

*GLX Model

A CONVENIENT LEGACY

From exceptional cabin space to effortless cruise control, automatic climate control, and incredible tech that enhances your driving experience, the Grand Vitara has got you conveniently covered.

You can look forward to grand display features, including the **9” touchscreen infotainment system** in the GLX model and the **7” touchscreen infotainment system** in the GL model. Both are fitted with a reverse camera. These come with smartphone connectivity for both Apple CarPlay™ and Android Auto™ through USB. There is also wireless Apple CarPlay connectivity for you to enjoy, as well as voice recognition and Bluetooth playback.

360 GRAND VIEW (GLX)

The 360-view camera system is equipped with four cameras – one each on the front, rear, and sides of the new Grand Vitara which are linked to the display audio to provide a 360-degree view. These functions allow you to check your surroundings from the infotainment screen.

HEAD-UP DISPLAY (GLX)

The combiner-type head-up display gives you information such as speed, instant fuel economy, engine revs, and vehicle alerts without taking your eyes off the road.

WIRELESS CHARGER AND USB PORTS

Stay connected inside the Grand Vitara by using the wireless charger* for compatible smartphones. USB charging ports are also available for wired charging. You can find these in the front of the car, with the ones at the back also available for your convenience.

*GLX Model

A GRIPPING LEGACY

The ALLGRIP SELECT all-wheel drive system* lets you take on any road, using the four easily selectable modes. **Auto** for fuel efficiency. **Sport** for increased performance. **Snow/Mud** feature for stability and enhanced traction. **Lock** for maximum 4WD torque when driving on difficult or rocky surfaces.

*GLX Hybrid AllGrip Model

MODERNISE YOUR LEGACY WITH HYBRID TECHNOLOGY

MILD-HYBRID DRIVE (GLX HYBRID ALLGRIP)

The mild-hybrid system is designed to improve efficiency and reduce emissions while delivering consistent peak performance. It boasts exceptional fuel efficiency, consuming only 5.6L/100km of fuel compared to the non-hybrid models' average of 6.0L/100km. With this, the hybrid AllGrip model is an outstanding choice for eco-conscious drivers who still want great performance.

ENGINE AUTO STOP-START TECHNOLOGY

The Engine Auto Stop-Start Technology* helps to conserve fuel and minimise emissions by automatically turning off the engine when the vehicle comes to a complete stop.

This feature is effective in the hybrid model of the Grand Vitara, which already boasts improved fuel efficiency. When the driver releases the brake pedal, the engine restarts seamlessly, allowing the vehicle to continue driving smoothly. Drivers can manually turn off the system if they prefer, but for those looking to maximise on fuel savings, the Engine Auto Stop-Start Technology is an excellent choice.

*GLX Hybrid AllGrip Model

A SAFE LEGACY

The Grand Vitara has incredible safety features that will give you peace of mind when you're on the road. The safety features, including ABS and EBD, enable you to drive confidently, safeguarding both occupants and pedestrians.

ESP (ELECTRONIC STABILITY PROGRAM)

In situations where you turn the steering wheel too sharply and/or the road is slippery, the ESP can detect a wheel slip and helps you stay in directional control by automatically controlling the engine torque and brakes to suppress the wheel slip.

SIX AIRBAGS

The Grand Vitara comes with six airbags which can assist with decreasing the risk of injuries by protecting the driver and the passengers in the car. There are dual front airbags, as well as side airbags which reduce impact to the chest in case of a side collision, and curtain airbags, which reduce impact to the head.

ACCESSORIES

The new Grand Vitara offers a wide range of accessories that allow you to personalise your vehicle according to your preferences. With the flexibility to tailor your Grand Vitara to your liking, you can enjoy a vehicle that reflects your individual style and personality.

ASK
A QUESTION
GRAND VITARA
LIVE THE LEGACY
GRAND VITARA

MAJOR SPECIFICATIONS

Steering	RHD
Number of doors	5-door
Engine	Petrol
	1.5ℓ
Drive system	2WD/4WD

DIMENSIONS

Overall length (mm)		4 345
Overall width (mm)		1 795
Overall height (mm)		1 645
Wheelbase (mm)		2 600
Tread	Front (mm)	1 530
	Rear (mm)	1 535
Minimum turning radius (m)		4,7
Minimum ground clearance (mm)		210

CAPACITIES

Seating capacity		Persons	5
Fuel tank capacity		ℓ	45
Luggage capacity *1	Max volume	ℓ	1 147
	Rear seatback folded (VDA method)	ℓ	310

ENGINE

Type		K15B	K15C 12V-ISG
Number of cylinders		4	
Number of valves		16	
Piston displacement	cm3	1 462	
Bore x stroke	mm	74 x 85	
Compression ratio		10,5	12
Maximum output	kW/rpm	77/6,000	76/6,000
Maximum torque	N-m/rpm	138/4,400	137/4,400
Fuel distribution		Multi-point injection	

TRANSMISSION

Type			K15C 12V-ISG
			AllGrip
		4AT	6AT
Gear ratio	1st	2,8750	4,6666
	2nd	1,5681	2,5333
	3rd	1,0000	1,5555
	4th	0,6969	1,1351
	5th	-	0,8593
	6th	-	0,6857
	Reverse	2,3000	3,3939
Final gear ratio		4,375	3,6830

CHASSIS

Steering		
Brakes	Front	
	Rear	
Suspension	Front	
	Rear	
Tyres		

WEIGHTS

		K15C 12V-ISG
Type		AllGrip
	4AT	6AT
Kerb weight (min./with full option) (kg)	1,145	1,190
Gross vehicle weight (kg)	1,625	1,660
Towing capacity (braked)		

PERFORMANCE

		K15C 12V-ISG
Type		AllGrip
	4AT	6AT
Maximum speed (km/h)	170	165

MAJOR EQUIPMENT (CONTINUED)

Type		K15B		K15C 12V-ISG
Drive system		2WD		AllGrip
Transmission		5MT/4AT	4AT	6AT
Grade		GL	GLX	GLX

CHASSIS

Tyres and wheels	215/60 R17 + alloy wheels	◆	-	-
	215/60 R17 + alloy wheels (Diamond Cut)	-	◆	◆
Spare tyre and wheel	175/65R15 + steel wheel	◆	◆	◆

EXTERIOR

Panoramic sunroof		-	◆	◆
Front grille	Chrome + paint	◆	◆	◆
Roof rails	Black	◆	◆	◆
	Silver	◆		◆
Outside door handles	Body coloured	◆	◆	◆
Outside mirror	Body coloured (if monotone)	◆	◆	◆
	Black (if 2-tone)	-	◆	◆
Skid plate garnish	Front	◆	◆	◆
	Back	◆	◆	◆
Door beltline garnish	Material	◆	-	-
	Chrome	-	◆	◆
Tailgate open system	Electromagnetic	◆	◆	◆

VISIBILITY

Headlamps	LED projector	◆	◆	◆
	Follow me home system	◆	◆	◆
Headlamp leveling device	Manual	◆	◆	◆
Automatic lamps		◆	◆	◆
Position lamps	LED	◆	◆	◆
Front door	Green glass	◆		
	Green glass + UV CUT	-	◆	◆

VISIBILITY (CONTINUED)

Rear door, quarter & tailgate window	Green glass	◆	-	-
	Dark gray glass	-	◆	◆
Front wiper	Variable intermittent	◆	◆	◆
Rear wiper	Fixed intermittent	◆	◆	◆
Electric demister		◆	◆	◆
Outside mirrors	Electrically adjustable	◆	◆	◆
	Electrically folding	◆	◆	◆
	With built-in turn signal lamps	◆	◆	◆
Day / night rearview mirror	Manual dimming	◆	-	-
	Automatic dimming	-	◆	◆

STEERING AND INSTRUMENT PANEL

3-spoke steering wheel	Leather covered	◆	◆	◆
	Tilt-adjustable steering wheel	◆	◆	◆
	Telescopic-adjustable steering wheel	◆	◆	◆
	With audio controls	◆	◆	◆
	With cruise control	◆	◆	◆
	With hands-free phone control	◆	◆	◆
Electric power steering		◆	◆	◆
Tachometer		◆	◆	◆
Information display	4.2-inch colour TFT display	◆	◆	◆
	Clock	◆	◆	◆
Light-off reminder	Alarm	◆	◆	◆
Power off reminder	Alarm	◆	◆	◆
Door ajar reminder	Lamp	◆	◆	◆
Driver's seatbelt reminder	Lamp & alarm	◆	◆	◆
Passenger's seatbelt reminder	Lamp & alarm	◆	◆	◆
Low fuel warning	Lamp	◆	◆	◆

MAJOR EQUIPMENT (CONTINUED)

Type	K15B		K15C 12V-ISG
Drive system	2WD		AllGrip
Transmission	5MT/4AT	4AT	6AT
Grade	GL	GLX	GLX

DRIVING AMENITIES

Electric windows	Driver side (up/down auto)	❖	❖	❖
	Passenger side	❖	❖	❖
	Rear	❖	❖	❖
Central door locking		❖	❖	❖
Keyless push start system		❖	❖	❖
Key less entry system		❖	❖	❖
Air conditioner	Automatic	❖	❖	❖
Heater		❖	❖	❖
Rear A/C ventilation		❖	❖	❖
Pollen filter	PM2.5 filter type	❖	❖	❖
Audio	Sharkfin antenna (mounted at rear of roof)	❖	❖	❖
	Speaker x 4	❖	❖	❖
	Tweeter x 2	-	❖	❖
	7” touchscreen + reverse camera	❖	-	-
	9” display audio + 360-view camera	-	❖	❖
Cruise control		❖	❖	❖

INTERIOR

Cabin lights	Front map light	❖	❖	❖
	Cabin light (3-position)	❖	❖	❖
	Glove box light	-	❖	❖
	Footwell light (both front seats)	-	❖	❖
	Ambient lights	-	❖	❖

Sun visors	Driver’s side	With ticket holder	❖	❖	❖
		With vanity mirror	❖	❖	❖
		With illumination function	-	❖	❖
	Passenger’s side	With ticket holder	❖	❖	❖
		With vanity mirror	❖	❖	❖
		With illumination function	-	❖	❖

INTERIOR (CONTINUED)

Assist grips	Passenger’s side	❖	❖	❖
	Rear x 2	❖	❖	❖
Cup holders	Front x 2	❖	❖	❖
	Rear armrest x 2	❖	❖	❖
Bottle holders	Front x 2	❖	❖	❖
	Rear x 2	❖	❖	❖
Centre console box with armrest		❖	❖	❖
Head-up display		-	❖	❖
Shift knob	With black accent	❖(MT)	-	-
	With plating	-	❖(MT)	-
	With satin plating	❖(AT)	❖(AT)	❖
USB socket	Front	-	❖	❖
12V accessory socket	Front	❖	❖	❖
Wireless charger		-	❖	❖
USB charger	Rear x 2	-	❖	❖
Foot rest	Driver’s side	❖	❖	❖
Remote fuel lid opener		❖	❖	❖
Front and rear door trim	Fabric	❖	-	-
	Synthetic leather	-	❖	❖
Inside door handles	Chrome	❖	❖	❖

SEATS

Front seats	Seat height adjuster (driver’s side)	❖	❖	❖
	Head restraints (separate type)	❖	❖	❖
	Seatback pocket (driver's side)	❖	❖	❖
	Seatback pocket (passenger’s side)	❖	❖	❖
Rear seats	60:40-split single-fold	❖	❖	❖
	Head restraint x 3 (separate type)	❖	❖	❖
Seat upholstery material	Synthetic Leather	-	❖	❖
	Fabric	❖	-	-

MAJOR EQUIPMENT

Type		K15B		K15C 12V-ISG
Drive system		2WD		AllGrip
Transmission		5MT/4AT	4AT	6AT
Grade		GL	GLX	GLX
LUGGAGE AREA				
Luggage shelf		◆	◆	◆
Luggage area light		-	◆	◆
SAFETY, SECURITY, AND ENVIRONMENTAL COMPATIBILITY				
SRS front dual airbags		◆	◆	◆
SRS side airbags		◆	◆	◆
SRS curtain airbags		◆	◆	◆
Seatbelts	Front: 3-point ELR seatbelts with pretensioner and force limiter	◆	◆	◆
	Rear: 3-point ELR seatbelts x3	◆	◆	◆
ISOFIX lower anchorage	x 2	◆	◆	◆
ISOFIX top tether anchorage	x 2	◆	◆	◆
Childproof rear door locks		◆	◆	◆
Side impact door beams		◆	◆	◆
ABS with EBD function		◆	◆	◆
ESP®*		◆	◆	◆
Hill hold control		◆	◆	◆
Brake assist function		◆	◆	◆
Parking sensors	Rear	◆	◆	◆
LED-DRL (Daytime Running Lights)		◆	◆	◆
High-mount stop lamp		◆	◆	◆
Immobilizer		◆	◆	◆
Security alarm		◆	◆	◆
Pedal release system		◆	◆	◆

◆ : Standard - : Not Available
*: Bluetooth is a registered trademark of Bluetooth SIG, Inc.
**: Dependant on exterior colour.

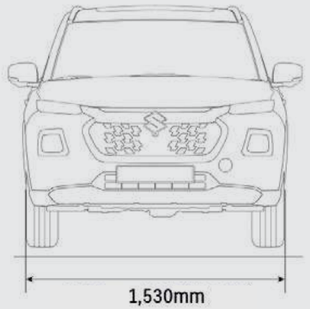

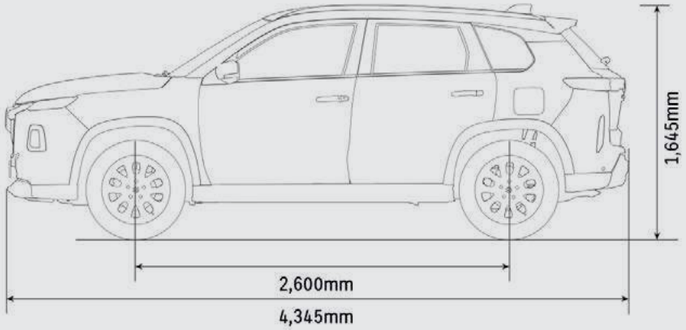

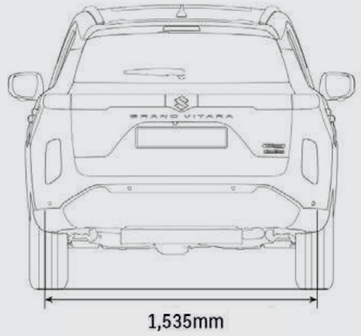

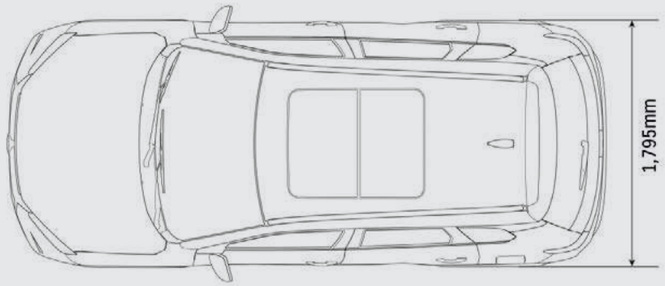

GRAND VITARA
LIVE THE LEGACY
GRAND VITARA

Accessories

This new breed of SUVs makes a strong first impression wherever it goes with these premium and luxurious exterior accessories.

GRAND EXTERIOR

1 | **Roof Basket***
Part No. 990J0M76TR0-010

2 | **Roof Carrier Rails**
Part No. 78901M76T00

3 | **Front Skid Garnish**
Part No. 990J0M76T13-030
☐ Black

4 | **Front Bumper**
Part No. 990J0M76T07-010
■ Extender – Chrome
Part No. 990J0M76T07-020
■ Extender – Smoked

5 | **Head Lamp Garnish**
Part No. 990J0M76T13-050
■ Smoked

6 | **Head Lamp Garnish**
Part No. 990J0M76T13-060
☐ Black

1

5

6

2

7

8

3

9

10

4

11

7 | **ORVM Garnish**
Part No. 990J0M76T13-070
■ Chrome

8 | **ORVM Garnish**
Part No. 990J0M76T13-090
☐ Black

9 | **Side Skid Plate**
Part No. 990J0M76T07-040
☐ + ■ Black + Smoked
Body Side Moulding
Part No. 990J0M76T01-020
■ Smoked

10 | **Side Skid Plate**
Part No. 990J0M76T07-030
☐ + ■ Black + Chrome
Body Side Moulding
Part No. 990J0M76T01-010
■ Chrome

11 | **Back Door Garnish**
Part No. 990J0M76T13-010

NP | **Tow Bar**
Part No. 72901- 76T00-000

*No Picture

12

13

14

15

16

12 | Rear LED Garnish
Part No. 990J0M76T13-150
Smoked
Part No. 990J0M76T13-120
Chrome

13 | Door Visor
Part No. 990JM76TQ0-010

14 | Rear Skid Plate
Part No. 990J0M76T07-050
□ + ■ Black + Chrome
Part No. 990J0M76T07-060
Smoked

15 | Mud Flap
Part No. 72201M76TX0

16 | Trunk sill Guard
Part No. 990J0M76TM9-010

GRAND INTERIOR

1 | 3D Boot Mat
Part No. 990J0M76TA3-010

2 | All Weather 3D Mat
Part No. 75901M76TK0-000

3 | Door Sill Guard
Part No. 990J0M76TM8-010

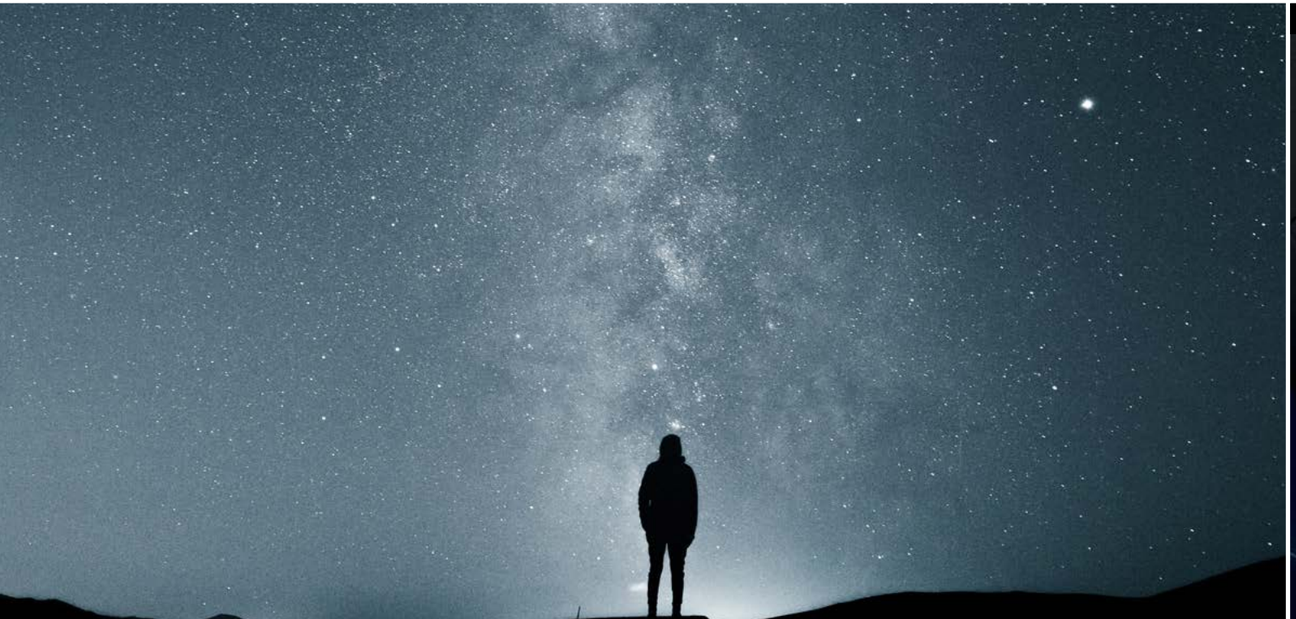

GRAND COLOUR RANGE

Arctic White Pearl with Midnight Black Pearl Roof

Arctic White Pearl

Cave Black Pearl Metallic

Celestial Blue Pearl Metallic

Grandeur Grey Pearl Metallic

Midnight Black Pearl

Opulent Red Pearl Metallic
with Midnight Black Pearl Roof

Opulent Red Pearl Metallic

Splendid Silver Pearl Metallic
with Midnight Black Pearl Roof

Splendid Silver Pearl Metallic

SUZUKI COMPLETE

Suzuki understands that purchasing a new vehicle is a substantial investment. Our unwavering commitment to customer satisfaction is represented in our 'Suzuki Complete' package, which includes every aspect of after-sales support, with warranty, service plan, and roadside assistance standard.

Warranty
All Suzuki models are covered by a comprehensive promotional warranty against any defects for a period of 5 year / 200 000km. This is supported by a six year body corrosion warranty subject to terms and conditions.

Service Plan
The Grand Vitara benefits from a 4 year / 60 000km service plan. This plan includes the replacement of oil, the oil filter, fuel filter, brake fluid, air filter and accessory belts, but excludes tyres, brakes and other wear-and-tear items.

Service Intervals
15 000 km or one year, whichever comes first.

Roadside Assistance
Every new Grand Vitara comes with a five-year roadside assistance plan. Some of the benefits offered by this comprehensive package include: battery and locksmith call-out services, mechanical and electrical, breakdown towing (accident towing is optional), emergency medical rescue, vehicle repatriation and a stand-by-you roadside security armed-response service.

All care is taken to ensure the accuracy of this brochure at the time of print approval. Specifications, features, prices and model availability may vary from those specified and may change without notice. Always consult your authorised Suzuki Dealer or refer to www.SuzukiAuto.co.za for the latest details on all models. SUZUKI AUTO South Africa (PTY) Ltd will not be held liable for any loss as a result of reliance on the content of this brochure, whether in negligence or otherwise. Vehicles are shown for illustrative purposes only and may not depict exact specifications. Published May 2023.

Part number 9900L-78K07-CAT

SUZUKI AUTO SOUTH AFRICA (PTY) LTD | Tel: 0861 511 111
No.52 Saturn Crescent, Linbro Business Park, Frankenwald, Marlboro, Sandton
www.SuzukiAuto.co.za